REV	DESCRIPTION	APPD	DATE

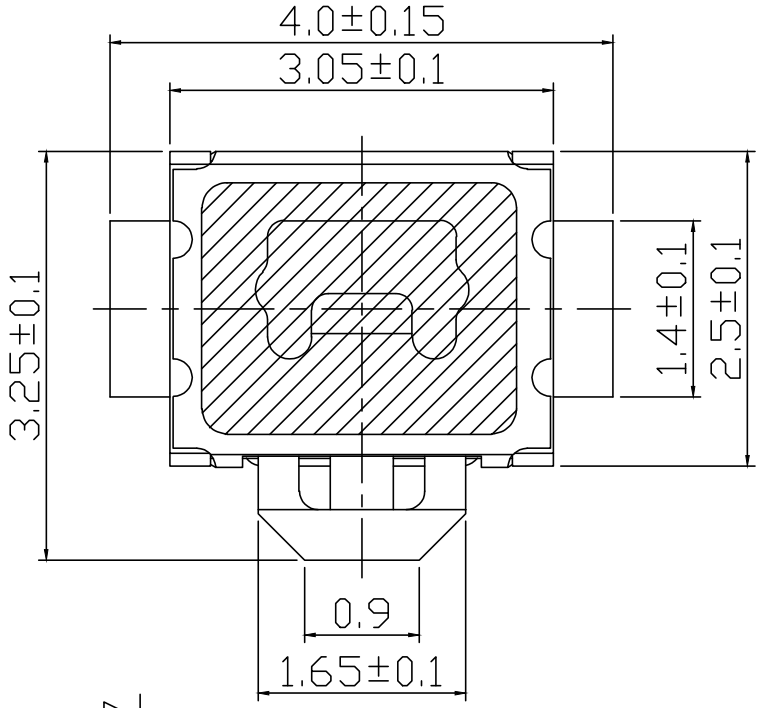

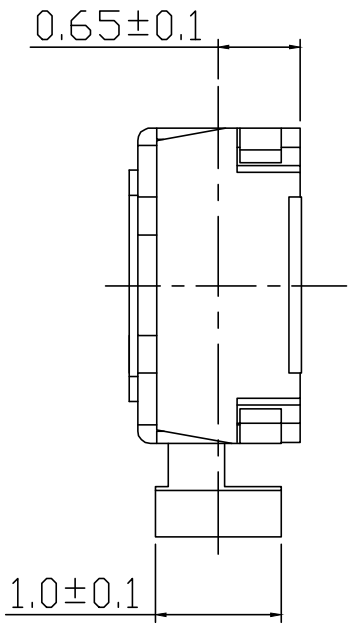

1.额定功率/Rating:DC 12V 50mA;
2.接触阻抗/Contact Resistance:100mΩ Max;
3.绝缘/Insulation Resistance:100MΩ Max;
4.耐电压/Withstanding Voltage:AC250V For 1 Minute;
5.寿命/Life:100,000 cycles Min;
6.动作力/Operating Force:180±50gf;
7.行程/Travel:0.15±0.05mm;
8.使用温度/Operating Temperature:-20°c~70°c.

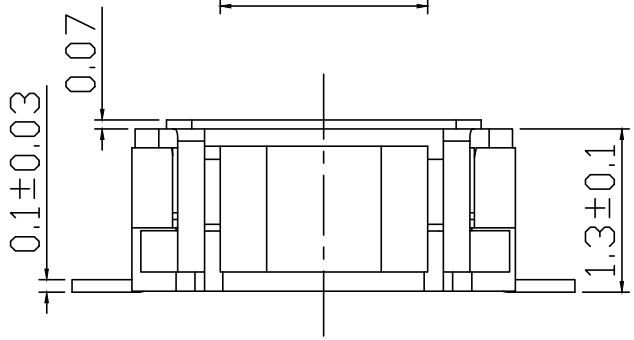

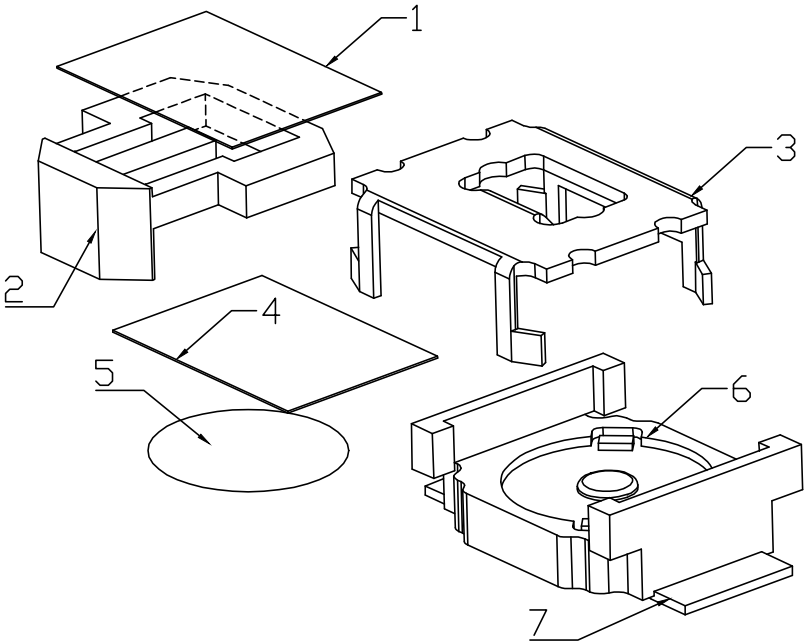

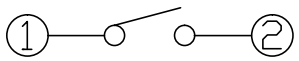

Circuit Diagram

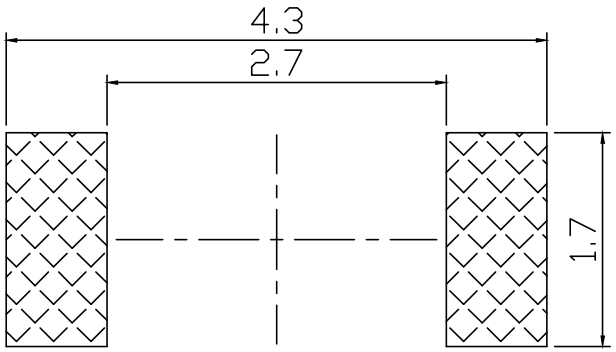

P.C.B Layout

NO.	DESCRIPTION	QTY	MATERIAL	FINISH
1	SEAL PLATE	1	PI	YELLOW
2	STEM	1	LCP	BLACK
3	COVER	1	SUS304	CLEANOUT
4	SEAL PLATE	1	PI	YELLOW
5	CONTACT	1	SUS301	Ag PLATED
6	BOTTOM	1	LCP	WHITE
7	TERMINAL	2	PHOSPHOR COPPER	Ag PLATED

UNIT:MM

SIZE: A4 SHEET: 1 OF 1

SCALE: / VER: 1

PART NO:

GENERAL TOLERANCE:
X.=±0.2, .X=±0.1
.XX=±0.05,
.X°=±2° .XX°=±1°

DESIGNER BY: YONGX
APPROVED BY: JACK
DATE:

TITLE: TACT SWITCH

MODEL NO: TS23C-FV-J

岡琦電子有限公司
GONGKIN ELECTRONIC CO.,LTD